Ersatzteile Danfoss

# Dichtsatz OMR 151-1277

| | | | Number per motor | | | | | | |
|---|---|---|---|---|---|---|---|---|---|
| | | | | Serie 6* | Series 5 with separate spigot flange | | | | |
| Item | Spare Part | Dimensions | Code no. 151-1277 | OMR Flange A2 | OMR Flange A2 | OMR C Flange A2 | OMR Flange A4 | OMR Flange C | OMRW N |
| 3 | Spare parts bag for motors with | 35 • 28.5 • 4.0 mm NBR | 151-1313 | | 1 | 1** | 1 | 1 | 1 |
| 5 | standard shaft seal and ∅25 | 42 • 28.6 • 5.5 mm HSN | 633B3385 | | | | | | |
| 6 | mm, ∅1", 1" spl.shaft (Series 5) | 47.2 • 3.5 mm NBR | 633B1191 | | | | | | |
| 6 | 1 pcs. Dust seal | 90 • 2.0 mm NBR | 633B1333 | | | | | | |
| 16 | 1 pcs. Shaft seal (series 5) | 48 • 2.0 mm NBR | 633B0301 | | | | | | |
| 20 | 1 pcs. O-ring | 11.9• 8.2 • 1 mm | 684X0115 | | | | | | |
| 24 | 1 pcs. O-ring | 17.5 • 13.5 • 1.5 mm | 684X2120 | | | | | | |
| | 3 pcs. O-ring | | | | | | | | |
| | 7 pcs. Washer | | | | | | | | |
| | 1 pcs. Washer | | | | | | | | |

**Exploded View OMR, Metric Version Series 6 with Integrated Spigot Flange**

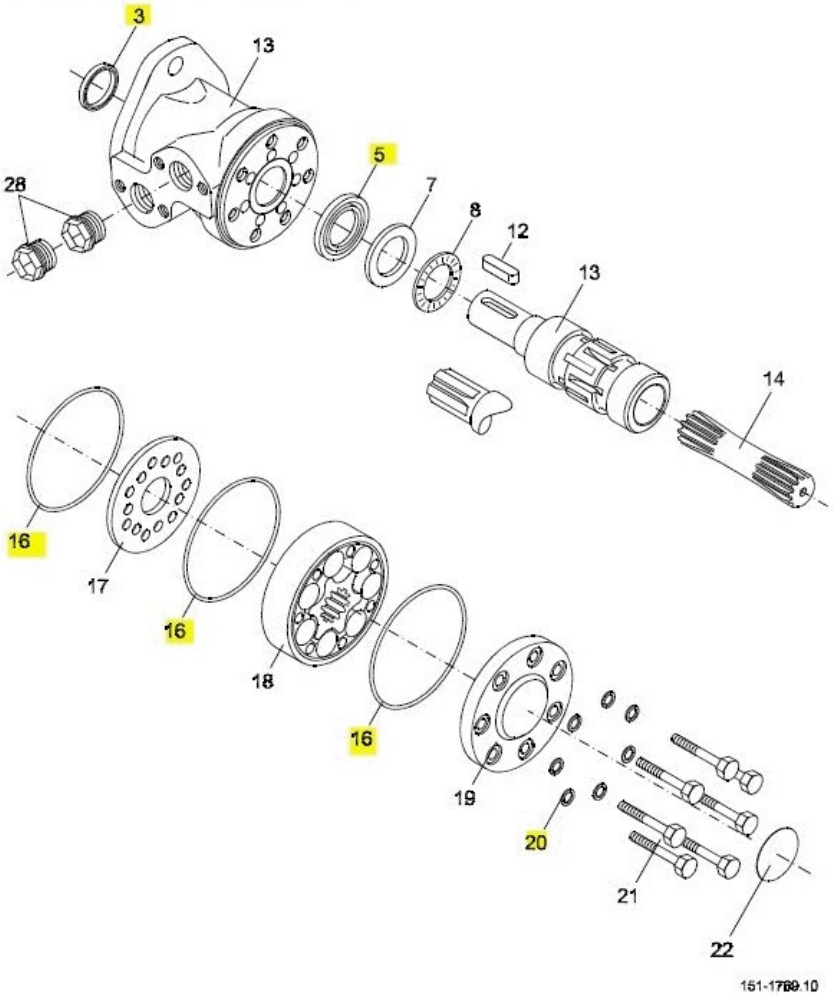

Ersatzteile Danfoss

# Dichtsatz OMR 151-1277
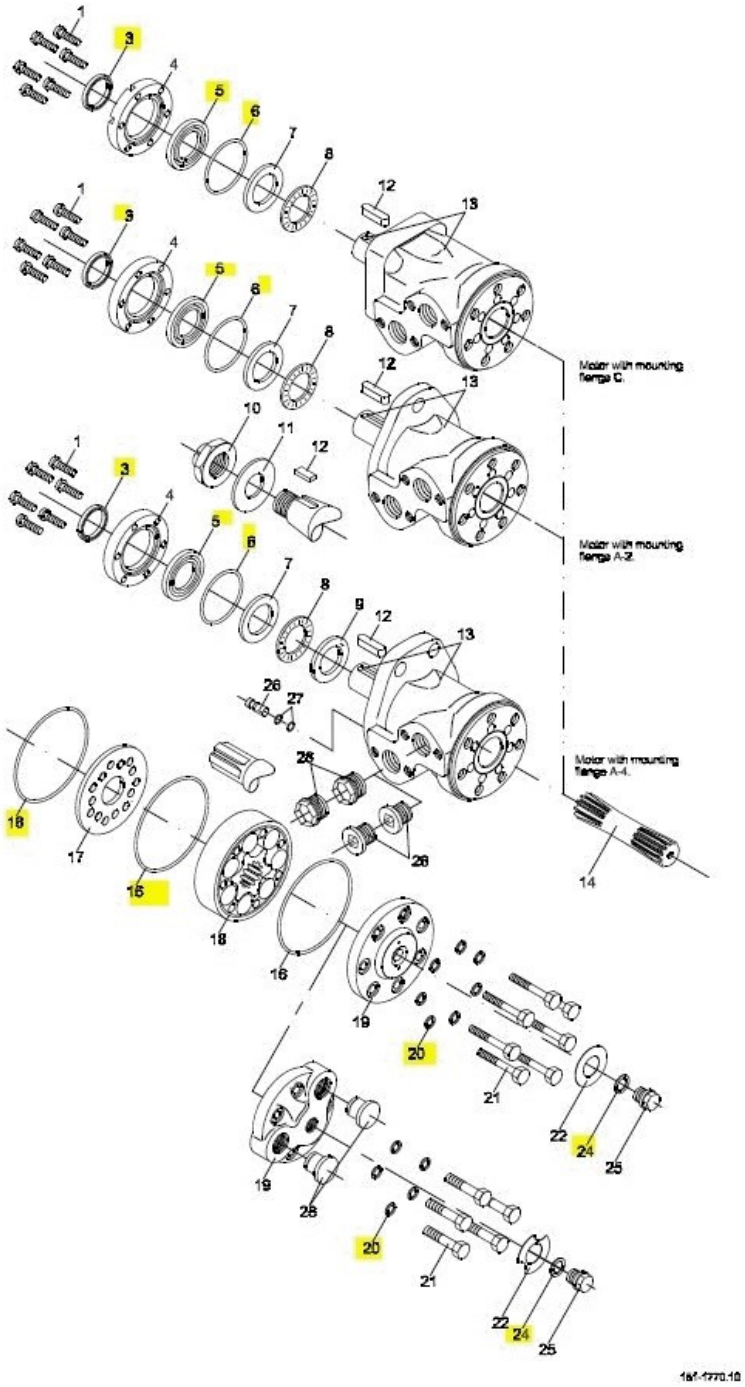
**Exploded View OMR and OMR C, Metric Version Series 5 with Separate Spigot Flange**